CRAFTSMAN®

INSTRUCTION MANUAL | GUIDE D'UTILISATION | MANUAL DE INSTRUCTIONES

AIR COMPRESSOR
COMPRESOR DE AIRE
COMPRESSEUR D'AIR

CM0200141A

IF YOU HAVE QUESTIONS OR COMMENTS, CONTACT US.
POUR TOUTE QUESTION OU TOUT COMMENTAIRE, NOUS CONTACTER.
SI TIENE DUDAS O COMENTARIOS, CONTÁCTENOS.

1-888-899-0146
1-888-331-4569

WWW.CRAFTSMAN.COM

Definitions: Safety Alert Symbols and Words

This instruction manual uses the following safety alert symbols and words to alert you to hazardous situations and your risk of personal injury or property damage.

DANGER: *Indicates an imminently hazardous situation which, if not avoided,* ***will*** *result in* ***death or serious injury****.*

WARNING: *Indicates a potentially hazardous situation which, if not avoided,* ***could*** *result in* ***death or serious injury****.*

CAUTION: *Indicates a potentially hazardous situation which, if not avoided,* ***may*** *result in* ***minor or moderate injury****.*

(Used without word) Indicates a safety related message.

NOTICE: *Indicates a practice* ***not related to personal injury*** *which, if not avoided,* ***may*** *result in* ***property damage****.*

Fig. A

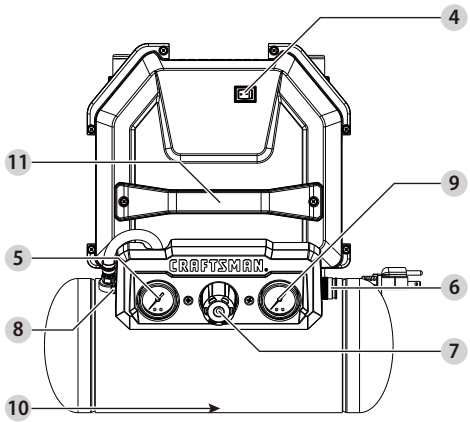

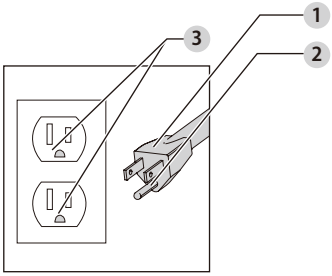

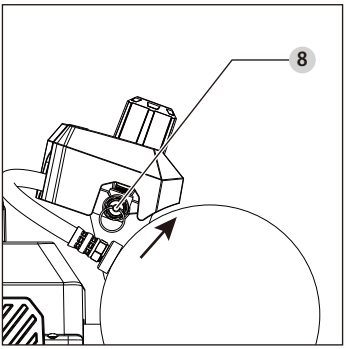

Components

1. Plug
2. Grounding pin
3. Grounded outlet
4. On/Off switch
5. Tank pressure gauge
6. Quick connect
7. Regulator knob
8. Safety valve
9. Outlet pressure gauge
10. Drain valve (not pictured, see Fig. D)
11. Handle

WARNING: Read all safety warnings and all instructions. *Failure to follow the warnings and instructions may result in electric shock, fire and/or serious injury.*

WARNING: *Never modify the product or any part of it. Damage or personal injury could result.*

WARNING: *To reduce the risk of injury, read the instruction manual.*

If you have any questions or comments about this or any product, call toll free at:1-888-899-0146.
If you would like more information about other Craftsman products, call CRAFTSMAN toll free at:1-888-331-4569.

Air Compressor
CMXECXA0200141A

SAVE ALL WARNINGS AND INSTRUCTIONS FOR FUTURE REFERENCE

WARNING: *This product can expose you to chemicals including lead which is known to the State of California to cause birth defects or other reproductive harm. For more information go to www.P65Warnings.ca.gov.*

DANGER: RISK OF EXPLOSION OR FIRE

What can happen	How to prevent it
It is normal for electrical contacts within the motor and pressure switch to spark.	Always operate the compressor in a well ventilated area free of combustible materials, gasoline, or solvent vapors.
If electrical sparks from compressor come into contact with flammable vapors, they may ignite, causing fire or explosion.	If spraying flammable materials, locate compressor at least 20 feet (6.1 m) away from spray area. An additional length of hose may be required.
	Store flammable materials in a secure location away from compressor.
Restricting any of the compressor ventilation openings will cause serious overheating and could cause a fire.	Never place objects against or on top of compressor pump.
	Operate compressor in an open area at least 12" (30.5 cm) away from any wall or obstruction that would restrict the flow of fresh air to the ventilation openings.
	Operate compressor in a clean, dry well ventilated area. Do not operate unit indoors or in any confined area.
Unattended operation of this product could result in personal injury or property damage. To reduce the risk of fire, do not allow the compressor to operate unattended.	Always remain in attendance with the product when it is operating.
	Always turn off and unplug unit when not in use.

CAUTION: RISK FROM NOISE

What can happen	How to prevent it
Under some conditions and duration of use, noise from this product may contribute to hearing loss.	Always wear certified safety equipment: ANSI S12.6 (S3.19) hearing protection.

DANGER: RISK TO BREATHING
(Asphyxiation)

What can happen	How to prevent it
The compressed air directly from your compressor is not safe for breathing. The air stream may contain carbon monoxide, toxic vapors, or solid particles from the air tank. Breathing these contaminants can cause serious injury or death.	Air obtained directly from the compressor should never be used to supply air for human consumption. In order to use air produced by this compressor for breathing, suitable filters and in-line safety equipment must be properly installed. In-line filters and safety equipment used in conjunction with the compressor must be capable of treating air to all applicable local and federal codes prior to human consumption.
Exposure to chemicals in dust created by power sanding, sawing, grinding, drilling, and other construction activities may be harmful.	Work in an area with good ventilation. Read and follow the safety instructions provided on the label or safety data sheets for the materials you are spraying. Always use certified safety equipment: OSHA/MSHA/NIOSH respiratory protection designed for use with your specific application.
Sprayed materials such as paint, paint solvents, paint remover, insecticides, weed killers, may contain harmful vapors and poisons.	

WARNING: RISK OF BURSTING

Air Tank: On February 26, 2002, the U.S. Consumer Product Safety Commission published Release # 02-108 concerning air compressor tank safety:

Air compressor receiver tanks do not have an infinite life. Tank life is dependent upon several factors, some of which include operating conditions, ambient conditions, proper installations, field modifications, and the level of maintenance. The exact effect of these factors on air receiver life is difficult to predict.

If proper maintenance procedures are not followed, internal corrosion to the inner wall of the air receiver tank can cause the air tank to unexpectedly rupture allowing pressurized air to suddenly and forcefully escape, posing risk of injury to consumers.

Your compressor air tank must be removed from service by the end of the year shown on your tank warning label.

The following conditions could lead to a weakening of the air tank, and result in a violent air tank explosion:

What can happen	How to prevent it
Failure to properly drain condensed water from air tank, causing rust and thinning of the steel air tank.	Drain air tank daily or after each use. If air tank develops a leak, replace it immediately with a new air tank or replace the entire compressor.
Modifications or attempted repairs to the air tank.	Never drill into, weld, or make any modifications to the air tank or its attachments. Never attempt to repair a damaged or leaking air tank. Replace with a new air tank.
Unauthorized modifications to the safety valve or any other components which control air tank pressure.	The air tank is designed to withstand specific operating pressures. Never make adjustments or parts substitutions to alter the factory set operating pressures.
Attachments & accessories:	
Exceeding the pressure rating of air tools, spray guns, air operated accessories, tires, and other inflatables can cause them to explode or fly apart, and could result in serious injury.	Follow the equipment manufacturers recommendation and never exceed the maximum allowable pressure rating of attachments. Never use compressor to inflate small low pressure objects such as children's toys, footballs, basketballs, etc.
Tires:	
Over inflation of tires could result in serious injury and property damage.	Use a tire pressure gauge to check the tires pressure before each use and while inflating tires; see the tire sidewall for the correct tire pressure. **NOTE:** Air tanks, compressors and similar equipment used to inflate tires can fill small tires similar to these very rapidly. Adjust pressure regulator on air supply to no more than the rating of the tire pressure. Add air in small increments and frequently use the tire gauge to prevent over inflation.

WARNING: RISK OF ELECTRICAL SHOCK

What can happen	How to prevent it
Your air compressor is powered by electricity. Like any other electrically powered device, If it is not used properly it may cause electric shock.	Never operate the compressor outdoors when it is raining or in wet conditions.
	Never operate compressor with protective covers removed or damaged.
Repairs attempted by unqualified personnel can result in serious injury or death by electrocution.	Any repairs required on this product should be performed by authorized service center personnel.
Electrical Grounding: Failure to provide adequate grounding to this product could result in serious injury or death from electrocution. See ***Grounding Instructions*** under **Installation**.	Make certain that the electrical circuit to which the compressor is connected provides proper electrical grounding, correct voltage and adequate fuse protection.

WARNING: RISK FROM FLYING OBJECTS

What can happen	How to prevent it
The compressed air stream can cause soft tissue damage to exposed skin and can propel dirt, chips, loose particles, and small objects at high speed, resulting in property damage or personal injury.	Always wear certified safety equipment: ANSI Z87.1 eye protection (CAN/CSA Z94.3) with side shields when using the compressor.
	Never point any nozzle or sprayer toward any part of the body or at other people or animals.
	Always turn the compressor off and bleed pressure from the air hose and air tank before attempting maintenance, attaching tools or accessories.

WARNING: RISK OF HOT SURFACES

What can happen	How to prevent it
Touching exposed metal such as the compressor head, engine head, engine exhaust or outlet tubes, can result in serious burns.	Never touch any exposed metal parts on compressor during or immediately after operation. Compressor will remain hot for several minutes after operation. Do not reach around protective shrouds or attempt maintenance until unit has been allowed to cool.

WARNING: RISK OF INJURY FROM LIFTING

What can happen	How to prevent it
Serious injury can result from attempting to lift too heavy an object.	The compressor is too heavy to be lifted by one person. Obtain assistance from others before lifting.

WARNING: RISK FROM MOVING PARTS

What can happen	How to prevent it
Moving parts such as the pulley, flywheel, and belt can cause serious injury if they come into contact with you or your clothing.	Never operate the compressor with guards or covers which are damaged or removed
	Keep your hair, clothing, and gloves away from moving parts. Loose clothes, jewelry, or long hair can be caught in moving parts.
	Air vents may cover moving parts and should be avoided as well.

Attempting to operate compressor with damaged or missing parts or attempting to repair compressor with protective shrouds removed can expose you to moving parts and can result in serious injury.	Any repairs required on this product should be performed by authorized service center personnel.

WARNING: RISK OF UNSAFE OPERATION

What can happen	How to prevent it
Unsafe operation of your air compressor could lead to serious injury or death to you or others.	Review and understand all instructions and warnings in this manual.
	Become familiar with the operation and controls of the air compressor.
	Keep operating area clear of all persons, pets, and obstacles.
	Keep children away from the air compressor at all times.
	Do not operate the product when fatigued or under the influence of alcohol or drugs. Stay alert at all times.
	Never defeat the safety features of this product.
	Equip area of operation with a fire extinguisher.
	Do not operate machine with missing, broken, or unauthorized parts.
	Never stand on the compressor.

WARNING: RISK OF FALLING

What can happen	How to prevent it
A portable compressor can fall from a table, workbench, or roof causing damage to the compressor and could result in serious injury or death to the operator.	Always operate compressor in a stable secure position to prevent accidental movement of the unit. Never operate compressor on a roof or other elevated position. Use additional air hose to reach high locations.

Specifications

Model	CMXECXA0200141A
Voltage/Hz-Single Phase	120/60
Minimum Branch Circuit Requirement	9 amps
Air Tank Capacity	1.5 Gallons (5.7 liters)
Approximate Cut-in Pressure	105 psig
Approximate Cut-out Pressure	135 psig
Model	CMXECXA0200141A
SCFM @ 40 psig	2.2 *
SCFM @ 90 psig	1.5 *
Regulated Pressure Rating (Approximate)	0–135 psi
Duty Cycle	50%

*Tested per ISO 1217

Refer to Glossary for abbreviations.

Glossary

Become familiar with these terms before operating the unit.

CFM: Cubic feet per minute.

SCFM: Standard cubic feet per minute; a unit of measure of air delivery.

PSIG: Pounds per square inch gauge; a unit of measure of pressure.

Code Certification: Products that bear one or more of the following marks: UL®, CUL, CULUS, ETL®, CETL, CETLUS, have been evaluated by OSHA certified independent safety laboratories and meet the applicable Standards for Safety.

Cut-In Pressure: While the motor is off, air tank pressure drops as you continue to use your accessory. When the tank pressure drops to a certain lower level the motor will restart automatically. The low pressure at which the motor automatically restarts is called “cut-in” pressure.

Cut-Out Pressure: When an air compressor is turned on and begins to run, air pressure in the air tank begins to build. It builds to a certain high pressure before the motor automatically shuts off, protecting your air tank from pressure higher than its capacity. The high pressure at which the motor shuts off is called “cut-out” pressure.

Branch Circuit: Circuit carrying electricity from electrical panel to outlet.

Duty Cycle: For proper operation of your air compressor, it is recommended that a 50% duty cycle be maintained; that is, the air compressor should not run more than 5 minutes in any 10 minute period.

ASSEMBLY AND ADJUSTMENTS

WARNING: To reduce the risk of serious personal injury, turn unit off and disconnect it from power source before making any adjustments or removing/installing attachments or accessories. *An accidental start-up can cause injury.*

WARNING: *Risk of unsafe operation. Unit cycles automatically when power is on. When performing maintenance, you may be exposed to voltage sources, compressed air, or moving parts. Personal injuries can occur. Before performing any maintenance or repair, disconnect power source from the compressor and bleed off all air pressure.*

UNPACKING

Remove unit from carton and discard all packaging.

INSTALLATION

How To Set Up Your Unit

Location of the Air Compressor

- Locate the air compressor in a clean, dry and well ventilated area.
- The air compressor should be located at least 12" (30.5 cm) away from the wall or other obstructions that will interfere with the flow of air.
- The air compressor pump and shroud are designed to allow for proper cooling. The ventilation openings on the compressor are necessary to maintain proper operating temperature. Do not place rags or other containers on or near these openings.

Grounding Instructions (Fig. A)

WARNING: Risk of Electrical Shock. In the event of a short circuit, grounding reduces the risk of shock by providing an escape wire for the electric current. This air compressor must be properly grounded.

The portable air compressor is equipped with a cord having a grounding wire with an appropriate grounding plug ❶.

1. The cord set and plug ❶ with this unit contains a grounding pin ❷. This plug MUST be used with a grounded outlet ❸.
   IMPORTANT: The outlet being used must be installed and grounded in accordance with all local codes and ordinances.
2. Make sure the outlet being used has the same configuration as the grounded plug. DO NOT USE AN ADAPTER. Refer to Fig. A.
3. Inspect the plug and cord before each use. Do not use if there are signs of damage.
4. If these grounding instructions are not completely understood, or if in doubt as to whether the compressor is properly grounded, have the installation checked by a qualified electrician.

DANGER: Risk of Electrical Shock. IMPROPER GROUNDING CAN RESULT IN ELECTRICAL SHOCK.

- ***Do not modify the plug provided. If it does not fit the available outlet, a correct outlet should be installed by a qualified electrician.***
- ***Repairs to the cord set or plug MUST be made by a qualified electrician.***

Extension Cords

If an extension cord must be used, be sure it is:

- a 3-wire extension cord that has a 3-blade grounding plug, and a 3-slot receptacle that will accept the plug on the product
- in good condition
- no longer than 50' (15.2 m)
- 12 gauge (AWG) or larger. (Wire size increases as gauge number decreases. 10 AWG and 8 AWG may also be used. DO NOT USE 14 OR 16 AWG.)

  NOTICE: *Risk of Property Damage. The use of an undersized extension cord will cause voltage to drop resulting in power loss to the motor and overheating. Instead of using an extension cord, increase the working reach of the air hose by attaching another length of hose to its end. Attach additional lengths of hose as needed.*

Voltage and Circuit Protection

Refer to ***Specifications*** for the voltage and minimum branch circuit requirements.

WARNING: *Risk of Overheating. Certain air compressors can be operated on a 15 amp circuit if the following conditions are met.*

- *Voltage supply to circuit must comply with the National Electrical Code.*
- *Circuit is not used to supply any other electrical needs.*
- *Extension cords comply with specifications.*
- *Circuit is equipped with a 15 amp circuit breaker or 15 amp time delay fuse.*
  NOTE: *If compressor is connected to a circuit protected by fuses, use only time delay fuses. Time delay fuses should be marked "D" in Canada and "T" in the US.*

If any of the above conditions cannot be met, or if operation of the compressor repeatedly causes interruption of the power, it may be necessary to operate it from a 20 amp circuit. It is not necessary to change the cord set.

OPERATION

WARNING: To reduce the risk of serious personal injury, turn unit off and disconnect it from power source before making any adjustments or removing/installing attachments or accessories. *An accidental start-up can cause injury.*

WARNING: *Risk of unsafe operation. Unit cycles automatically when power is on. When performing maintenance, you may be exposed to voltage sources, compressed air, or moving parts. Personal injuries can occur. Before performing any maintenance or repair, disconnect power source from the compressor and bleed off all air pressure.*

Know Your Air Compressor

READ THIS OWNER'S MANUAL AND SAFETY RULES BEFORE OPERATING YOUR UNIT. Compare the illustrations with your unit to familiarize yourself with the location of various controls and adjustments. Save this manual for future reference.

Description of Operation (Fig. A)

Become familiar with these controls before operating the unit.

On(I)/Off(O) Switch: Place this switch 4 in the On(I) position to provide automatic power to the pressure switch and Off(O) to remove power at the end of each use.

Pressure Switch (not shown): The pressure switch automatically starts the motor when the air tank pressure drops below the factory set "cut-in" pressure. It stops the motor when the air tank pressure reaches the factory set "cut-out" pressure.

Safety Valve: If the pressure switch does not shut off the air compressor at its "cut-out" pressure setting, the safety valve 8 will protect against high pressure by "popping out" at its factory set pressure (slightly higher than the pressure switch "cut-out" setting).

Tank Pressure Gauge: The tank pressure gauge 5 indicates the reserve air pressure in the tank.

Outlet Pressure Gauge: The outlet pressure gauge 9 indicates the air pressure available at the outlet side of the regulator. This pressure is controlled by the regulator and is always less than or equal to the tank pressure.

Regulator: Controls the air pressure shown on the outlet pressure gauge. Turn regulator knob 7 clockwise to increase pressure and counterclockwise to decrease pressure.

Cooling System (not shown): This compressor contains an advanced design cooling system. At the heart of this cooling system is an engineered fan. It is perfectly normal for this fan to blow air through the vent holes in large amounts. You know that the cooling system is working when air is being expelled.

Air Compressor Pump (not shown): Compresses air into the air tank. Working air is not available until the compressor has raised the air tank pressure above that required at the air outlet.

Drain Valve: The drain valve 10 is located at the base of the air tank and is used to drain condensation at the end of each use.

Check Valve (not shown): When the air compressor is operating, the check valve is "open", allowing compressed air to enter the air tank. When the air compressor reaches "cut-out" pressure, the check valve "closes", allowing air pressure to remain inside the air tank.

Motor Overload Protector (not shown): The motor has a thermal overload protector. If the motor overheats for any reason, the overload protector will shut off the motor. The motor must be allowed to cool down before restarting. To restart:

1. Set the On/Off switch to "Off" and unplug unit.
2. Allow the motor to cool.
3. Plug the power cord into the correct branch circuit receptacle.
4. Set the On/Off switch to "On" position.

Quick Connect : The quick connect 6 accepts industrial quick connect plugs.

How to Use Your Unit (Fig. A, B)

How to Stop

1. Set the On/Off switch 4 to "Off".
2. Unplug unit when not in use.

Before Starting

WARNING: Do not operate this unit until you read this instruction manual for safety, operation and maintenance instructions.

Before Each Start-Up

1. Set the On/Off switch 4 to "Off".
2. Plug the power cord into the correct branch circuit receptacle. (Refer to ***Voltage and Circuit Protection*** paragraph in the **Installation** section of this manual.)
3. Turn regulator knob 7 counterclockwise until fully closed. Ensure regulated pressure gauge reads 0 PSI (0 kPa).

   Fig. B

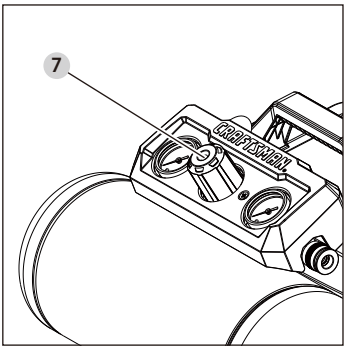

4. Attach hose and accessories.
5. Ensure all covers and labels are in place, legible (for labels) and securely mounted. Do not use compressor until all items have been verified.

WARNING: Risk of unsafe operation. Firmly grasp air hose in hand when installing or disconnecting to prevent hose whip.

WARNING: Risk of unsafe operation. Do not use damaged or worn accessories.

NOTE: This unit is equipped with quick connect 6. The hose or accessory being connected will require a quick connect plug.

WARNING: Risk of Bursting. Too much air pressure causes a hazardous risk of bursting. Check the manufacturer's maximum pressure rating for air tools and accessories. The regulator outlet pressure must never exceed the maximum pressure rating.

NOTICE: *Risk of property damage. Compressed air from the unit may contain water condensation and oil mist. Do not spray unfiltered air at an item that could be damaged by moisture. Some air tools and accessories may require filtered air. Read the instructions for the air tools and accessories.*

How to Start

1. Set the On/Off switch 4 to "On" and allow tank pressure to build. Motor will stop when tank pressure reaches "cut-out" pressure.
2. Turn regulator knob 7 clockwise to increase pressure and stop when desired pressure is reached.

MAINTENANCE

WARNING: To reduce the risk of serious personal injury, turn unit off and disconnect it from power source before making any adjustments or removing/installing attachments or accessories. *An accidental start-up can cause injury.*

WARNING: Risk of unsafe operation. Unit cycles automatically when power is on. When performing maintenance, you may be exposed to voltage sources, compressed air, or moving parts. Personal injuries can occur. Before performing any maintenance or repair, disconnect power source from the compressor and bleed off all air pressure.

Customer Responsibilities

	Before each use	Daily or after each use	See tank warning label
Check Safety Valve	X		
Drain Tank		X	
Remove tank from service			X[1]
1- For more information, call our Customer Care Center at 1-888-899-0146 or 1-888-331-4569.			

NOTE: See **Operation** section for the location of controls.

To Check Safety Valve (Fig. C)

WARNING: Risk of Bursting. If the safety valve does not work properly, over-pressurization may occur, causing air tank rupture or an explosion.

WARNING: Risk from Flying Objects. Always wear certified safety equipment: ANSI Z87.1 eye protection (CAN/CSA Z94.3) with side shields.

Before starting compressor, pull the ring on the safety valve 8 to make sure that the safety valve operates freely. If the valve is stuck or does not operate smoothly, it must be replaced with the same type of valve.

Fig. C

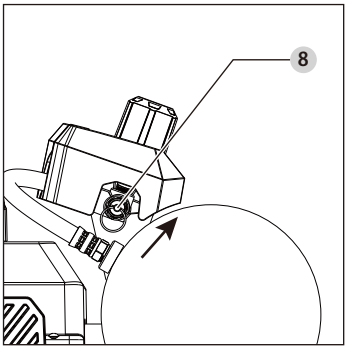

To Drain Tank (Fig. A, D)

WARNING: Risk of Unsafe Operation. Air tanks contain high pressure air. Keep face and other body parts away from outlet of drain. Use ANSI Z87.1 eye protection (CAN/CSA Z94.3) when draining as debris can be kicked up into face.

WARNING: Risk from noise. Always wear proper hearing protection during use. Under some conditions and duration of use, noise from this product may contribute to hearing loss.

NOTE: All compressed air systems generate condensate that accumulates in any drain point (e.g., tanks, filter, aftercoolers, dryers). This condensate contains lubricating oil and/or substances which may be regulated and must be disposed of in accordance with local, state, and federal laws and regulations.

WARNING: Risk of Bursting. Water will condense in the air tank. If not drained, water will corrode and weaken the air tank causing a risk of air tank rupture.

NOTICE: *Risk of Property Damage. Drain water from air tank may contain oil and rust which can cause stains.*

1. Set the On/Off switch 4 to "Off".
2. Turn the regulator knob 7 counterclockwise to set the outlet pressure to zero.
3. Remove the air tool or accessory.
4. Place a suitable container under the drain valve to catch discharge.
5. Pull ring on safety valve 8 allowing air to bleed from the tank until tank pressure is approximately 20 psi. Release safety valve ring.
6. Drain water from air tank by opening drain valve 10 on bottom of tank.

Fig. D

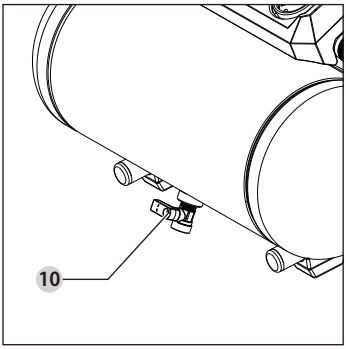

7. After the water has been drained, close the drain valve. The air compressor can now be stored.

NOTE: If drain valve is plugged, release all air pressure. The valve can then be removed, cleaned, the reinstalled.

Cleaning

WARNING: *Blow dirt and dust out of all air vents with clean, dry air at least once a week. To minimize the risk of eye injury, always wear ANSI Z87.1 approved eye protection when performing this.*

WARNING: *Never use solvents or other harsh chemicals for cleaning the non-metallic parts of the tool. These chemicals may weaken the plastic materials used in these parts. Use a cloth dampened only with water and mild soap. Never let any liquid get inside the tool; never immerse any part of the tool into a liquid.*

Repairs

WARNING: *To assure product SAFETY and RELIABILITY, repairs, maintenance and adjustment (including brush inspection and replacement, when applicable) should be performed by a CRAFTSMAN factory service center or a CRAFTSMAN authorized service center. Always use identical replacement parts.*

WARNING: *Risk of Unsafe Operation. Unit cycles automatically when power is on. When servicing, you may be exposed to voltage sources, compressed air, or moving parts. Before servicing unit unplug or disconnect electrical supply to the air compressor, bleed tank of pressure, and allow the air compressor to cool.*

Storage

Before you store the air compressor, make sure you do the following:

1. Review the **Maintenance** section on the preceding pages and perform scheduled maintenance as necessary.
2. Drain water from air tank. See ***To Drain Tank*** under **Maintenance**.

WARNING: Water will condense in the air tank. If not drained, water will corrode and weaken the air tank causing a risk of air tank rupture.

3. Protect the electrical cord and air hose from damage (such as being stepped on or run over). Wind air hose loosely around the compressor handle. Wrap electrical cord onto the cord wrap.
4. Store the air compressor in a clean and dry location.

Accessories

WARNING: *Since accessories, other than those offered by CRAFTSMAN, have not been tested with this product, use of such accessories with this tool could be hazardous. To reduce the risk of injury, only CRAFTSMAN recommended accessories should be used with this product.*

Recommended accessories for use with your tool are available at extra cost from your local dealer or authorized service center. If you need assistance in locating any accessory, please contact CRAFTSMAN, call **1-888-899-0146** or **1-888-331-4569**.

Register Online

Thank you for your purchase. Register your product now for:

- **WARRANTY SERVICE:** Registering your product will help you obtain more efficient warranty service in case there is a problem with your product.
- **CONFIRMATION OF OWNERSHIP:** In case of an insurance loss, such as fire, flood or theft, your registration of ownership will serve as your proof of purchase.
- **FOR YOUR SAFETY:** Registering your product will allow us to contact you in the unlikely event a safety notification is required under the Federal Consumer Safety Act.

Register online at **www.craftsman.com/registration** or **www.altonIndustries.com/register**

FREE WARNING LABEL REPLACEMENT: If your warning labels become illegible or are missing, call **1-888-899-0146** or **1-888-331-4569** for a free replacement.

One Year Limited Warranty

CRAFTSMAN will repair or replace, without charge, any defects due to faulty materials or workmanship for one year from the date of purchase. This warranty does not cover part failure due to normal wear or tool abuse. For further detail of warranty coverage and warranty repair information, visit **www.craftsman.com** or call **1-888-899-0146 / 1-888-331-4569**. This warranty does not apply to accessories or damage caused where repairs have been made or attempted by others. THIS LIMITED WARRANTY IS GIVEN IN LIEU OF ALL OTHERS, INCLUDING THE IMPLIED WARRANTY OF MERCHANTABILITY AND FITNESS FOR A PARTICULAR PURPOSE, AND EXCLUDES ALL INCIDENTAL OR CONSEQUENTIAL DAMAGES. Some states do not allow limitations on how long an implied warranty lasts or the exclusion or limitation of incidental or consequential damages, so these limitations may not apply to you. This warranty gives you specific legal rights and you may have other rights which vary in certain states or provinces.

90 DAY MONEY BACK GUARANTEE

If you are not completely satisfied with the performance of your CRAFTSMAN Power Tool, Laser, or Nailer for any reason, you can return it within 90 days from the date of purchase with a receipt for a full refund – no questions asked.

LATIN AMERICA: This warranty does not apply to products sold in Latin America. For products sold in Latin America, see country specific warranty information contained either in the packaging, call the local company or see website for warranty information.

TROUBLESHOOTING

WARNING: Risk of Unsafe Operation. Unit cycles automatically when power is on. When servicing, you may be exposed to voltage sources, compressed air, or moving parts. Before servicing unit unplug or disconnect electrical supply to the air compressor, bleed tank of pressure, and allow the air compressor to cool.

PROBLEM	CAUSE	CORRECTION
Excessive tank pressure - safety valve pops off.	Pressure switch does not shut off motor when compressor reaches "cut-out" pressure. Pressure switch "cut-out" too high.	Move On/Off lever to the "Off" position, if the outfit does not shut off contact a Trained Service Technician. Contact a Trained Service Technician.
Air leaks at fittings.	Tube fittings are not tight enough.	Tighten fittings where air can be heard escaping. Check fittings with soapy water solution. **Do Not Overtighten.**
Air leaks in air tank or at air tank welds.	Defective air tank.	Air tank must be replaced. Do not repair the leak. ***WARNING: Risk of bursting. Do not drill into, weld or otherwise modify air tank or it will weaken. The tank can rupture or explode.***
Air leaks between head and valve plate.	Leaking seal.	Contact a Trained Service Technician.
Air leak from safety valve.	Possible defect in safety valve.	Operate safety valve manually by pulling on ring. If valve still leaks, it should be replaced.
Knocking Noise.	Possible defect in safety valve.	Operate safety valve manually by pulling on ring. If valve still leaks, it should be replaced.
Pressure reading on the regulated pressure gauge drops when an accessory is used.	It is normal for "some" pressure drop to occur.	If there is an excessive amount of pressure drop when the accessory is used, adjust the regulator following the instructions in the ***Description of Operation*** paragraph in the **Operation** Section. **NOTE:** Adjust the regulated pressure under flow conditions (while accessory is being used).
Compressor is not supplying enough air to operate accessories.	Prolonged excessive use of air. Compressor is not large enough for air requirement. Hole in hose. Check valve restricted. Air leaks.	Decrease amount of air usage. Check the accessory air requirement. If it is higher than the SCFM or pressure supplied by your air compressor, you need a larger compressor. Check and replace if required. Have checked by a Trained Service Technician. Tighten fittings.
Regulator knob has continuous air leak.	Damaged regulator.	Replace.
Regulator will not shut off air outlet.	Damaged regulator.	Replace.
Motor will not run.	Fuse blown, circuit breaker tripped.	Check fuse box for blown fuse and replace as necessary. Reset circuit breaker. Do not use a fuse or circuit breaker with higher rating than that specified for your particular branch circuit. Check for proper fuse. You should use a time delay fuse. Check for low voltage problem. Check the extension cord. Disconnect the other electrical appliances from circuit or operate the compressor on its own branch circuit.
	Extension cord is wrong length or gauge.	Check the extension cord.
	Loose electrical connections.	Check wiring connection inside terminal box.
	Faulty motor.	Have checked by a Trained Service Technician.
	Motor overload protection switch has tripped.	Refer to ***Motor Overload Protector*** under **Description of Operation**. If motor overload protection trips frequently, contact a Trained Service Technician.